THERMOPLASTIC VALVES INC.

BUTTERFLY VALVE W/ THREADED LUG INSERTS

DWN BY	DATE	DWG NO.
CKP	1-96	102 BFAOTL

CERTIFIED
CORRECT FOR GENERAL DIMENSIONS
Date_____ Per:_____

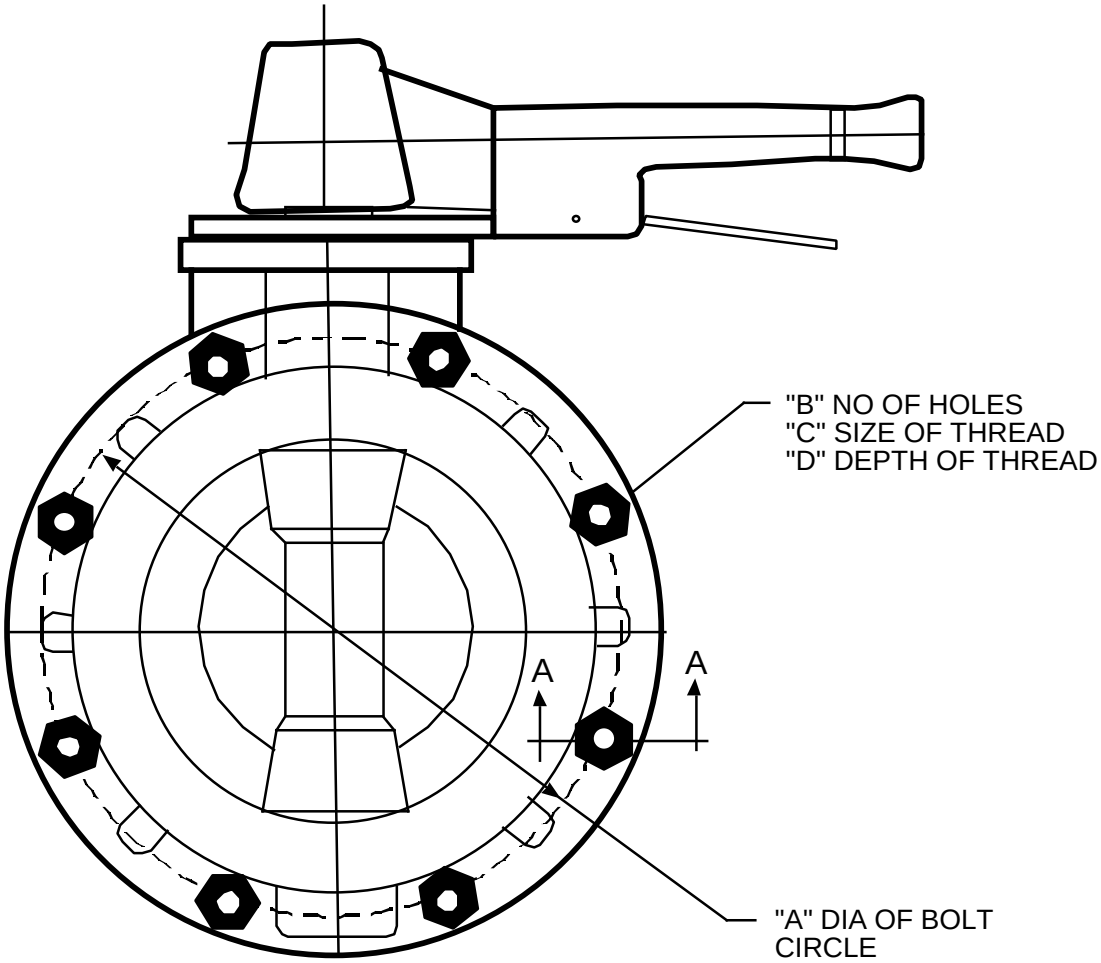

SECTION A-A

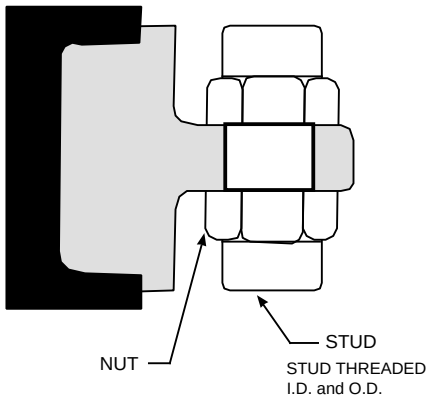

Materials of Construction

SIZE	A	B	C	D
4	7.50	8	1/2-13	.75
6	9.50	8	5/8-11	1.00
8	11.75	8	5/8-11	1.00
12	17.00	12	3/4-10	1.00